PRAIA Wall Light

MLWL170ANTBRS Antique Brass

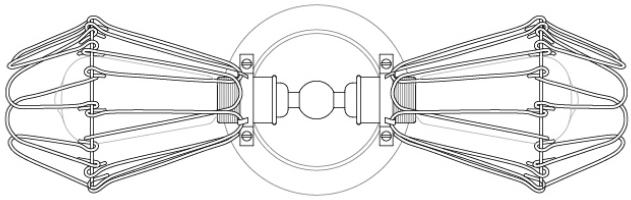

MATERIAL	Brass | Steel
HEIGHT	11cm | 4.33"
WIDTH | DIAMETER	37cm | 14.57"
LENGTH | PROJECTION	17cm | 6.69"
WEIGHT	0.71KG | 1.57lbs
LAMP HOLDER	E27 or E26 *
MAX WATTAGE	60W x 2
VOLTAGE	220/240v or 110/120v *
IP RATING	20
CLASS PROTECTION	I
SHADE CODE	-
CABLE | CHAIN | BAR LENGT	n/a
CABLE TYPE	-

Fixing Bracket MLWB01 | Antique Brass

* Fixing bracket may differ for UL wired products.

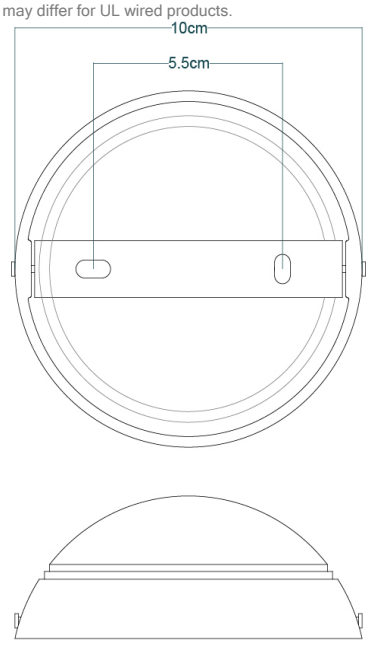

EST. 2009 mullan TAILOR-MADE

www.mullanlighting.com

Product Notes:
1) Bulbs not included. 2) Dimensions do not include bulbs. 3) All products are individually made-to-order and therefore may differ slightly within manufacturing tolerances. 4) Cable / chain can be shortened during installation. Longer cable / chain lengths available on request. 5) Additional colour finishes may be available on request. 6) UL wired products operate at 110/120v with the appropriate lamp holder. 7) Twisted cable is not available for UL wired products. Round cable in black or brown only is supplied instead. 8) Refer to our website for a full list of terms and conditions.

PRAIA Wall Light

MLWL170ANTSLV Antique Silver

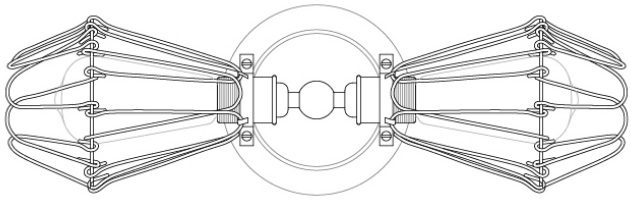

MATERIAL	Brass | Steel
HEIGHT	11cm | 4.33''
WIDTH | DIAMETER	37cm | 14.57''
LENGTH | PROJECTION	17cm | 6.69''
WEIGHT	0.71KG | 1.57lbs
LAMP HOLDER	E27 or E26 *
MAX WATTAGE	60W x 2
VOLTAGE	220/240v or 110/120v *
IP RATING	20
CLASS PROTECTION	I
SHADE CODE	-
CABLE | CHAIN | BAR LENGT	n/a
CABLE TYPE	-

Fixing Bracket MLWB01 | Antique Silver

* Fixing bracket may differ for UL wired products.

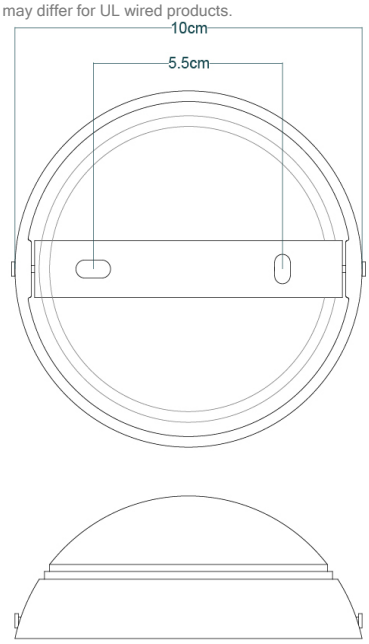

EST. 2009 mullan TAILOR-MADE

www.mullanlighting.com

Product Notes:
1) Bulbs not included. 2) Dimensions do not include bulbs. 3) All products are individually made-to-order and therefore may differ slightly within manufacturing tolerances. 4) Cable / chain can be shortened during installation. Longer cable / chain lengths available on request. 5) Additional colour finishes may be available on request. 6) UL wired products operate at 110/120v with the appropriate lamp holder. 7) Twisted cable is not available for UL wired products. Round cable in black or brown only is supplied instead. 8) Refer to our website for a full list of terms and conditions.