DOUBLE Bathroom Light

MLBWL169ANTBRS Antique Brass

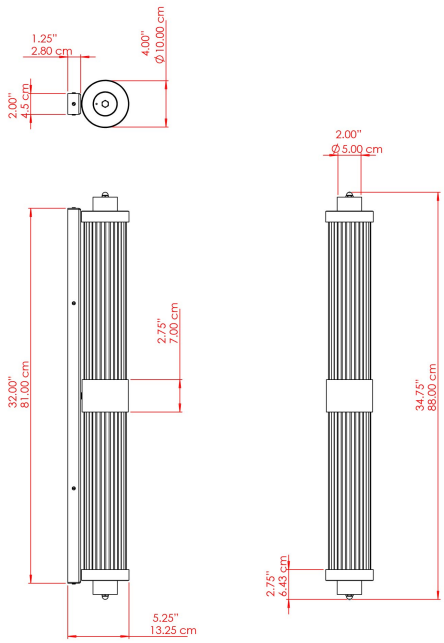

MATERIAL	Brass | Steel | Glass
HEIGHT	88cm
WIDTH | DIAMETER	13.25cm
LENGTH | PROJECTION	13.25cm
WEIGHT	4.8 kg
LAMPHOLDER	E27
MAX WATTAGE	40W
VOLTAGE	220/240v
IP RATING	IP44
CLASS PROTECTION	Class I
SHADE	GL185
FLEX | BAR | CHAIN LENGTH	n/a
CABLE TYPE	- |

FIXING BRACKET:

EST. 2009 mullan TAILOR-MADE

WWW.MULLANLIGHTING.COM

Product Notes:
1) Bulbs not included. 2) Dimensions do not include bulbs. 3) All products are individually made-to-order and therefore may differ slightly within manufacturing tolerances. 4) Cable / chain can be shortened during installation. Longer cable / chain lengths available on request. 5) Additional colour finishes may be available on request. 6) Refer to our website for a full list of terms and conditions.

DOUBLE Bathroom Light

MLBWL169ANTSLV Antique Silver

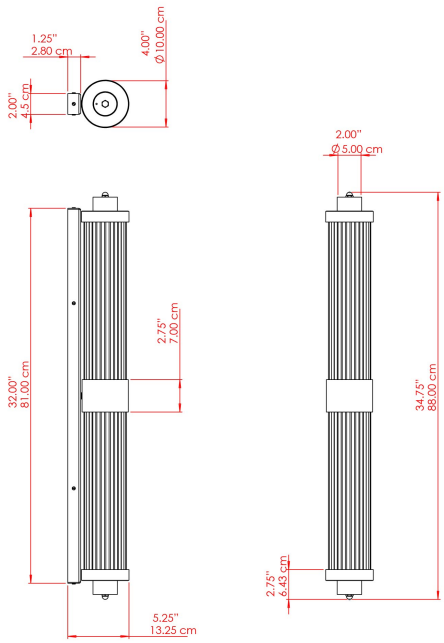

MATERIAL	Brass | Steel | Glass
HEIGHT	88cm
WIDTH | DIAMETER	13.25cm
LENGTH | PROJECTION	13.25cm
WEIGHT	4.8 kg
LAMPHOLDER	E27
MAX WATTAGE	40W
VOLTAGE	220/240v
IP RATING	IP44
CLASS PROTECTION	Class I
SHADE	GL185
FLEX | BAR | CHAIN LENGTH	n/a
CABLE TYPE	- |

FIXING BRACKET:

EST. 2009 mullan TAILOR-MADE

WWW.MULLANLIGHTING.COM

Product Notes:
1) Bulbs not included. 2) Dimensions do not include bulbs. 3) All products are individually made-to-order and therefore may differ slightly within manufacturing tolerances. 4) Cable / chain can be shortened during installation. Longer cable / chain lengths available on request. 5) Additional colour finishes may be available on request. 6) Refer to our website for a full list of terms and conditions.

DOUBLE Bathroom Light

MLBWL169NATBRS Natural Brass

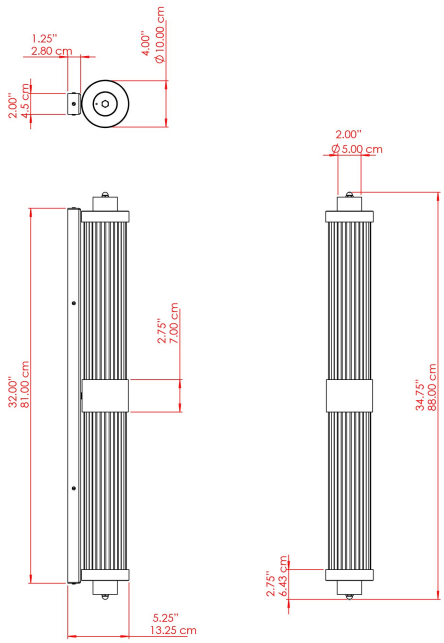

MATERIAL	Brass | Steel | Glass
HEIGHT	88cm
WIDTH | DIAMETER	13.25cm
LENGTH | PROJECTION	13.25cm
WEIGHT	4.8 kg
LAMPHOLDER	E27
MAX WATTAGE	40W
VOLTAGE	220/240v
IP RATING	IP44
CLASS PROTECTION	Class I
SHADE	GL185
FLEX | BAR | CHAIN LENGTH	n/a
CABLE TYPE	- |

FIXING BRACKET:

EST. 2009 mullan TAILOR-MADE

WWW.MULLANLIGHTING.COM

Product Notes:
1) Bulbs not included. 2) Dimensions do not include bulbs. 3) All products are individually made-to-order and therefore may differ slightly within manufacturing tolerances. 4) Cable / chain can be shortened during installation. Longer cable / chain lengths available on request. 5) Additional colour finishes may be available on request. 6) Refer to our website for a full list of terms and conditions.

DOUBLE Bathroom Light

MLBWL169POLBRS Polished Brass

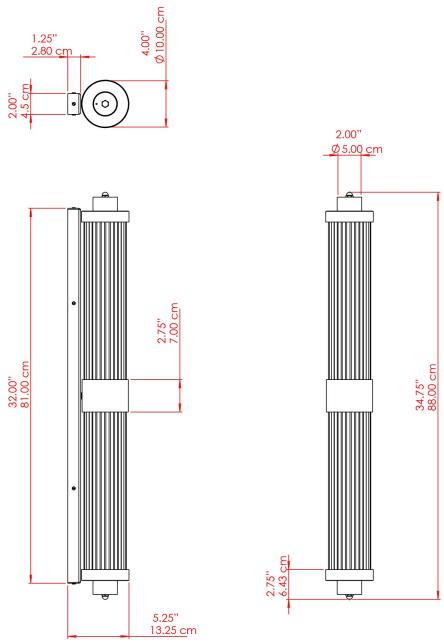

MATERIAL	Brass | Steel | Glass
HEIGHT	88cm
WIDTH | DIAMETER	13.25cm
LENGTH | PROJECTION	13.25cm
WEIGHT	4.8 kg
LAMPHOLDER	E27
MAX WATTAGE	40W
VOLTAGE	220/240v
IP RATING	IP44
CLASS PROTECTION	Class I
SHADE	GL185
FLEX | BAR | CHAIN LENGTH	n/a
CABLE TYPE	- |

FIXING BRACKET:

EST. 2009 mullan TAILOR-MADE

WWW.MULLANLIGHTING.COM

Product Notes:
1) Bulbs not included. 2) Dimensions do not include bulbs. 3) All products are individually made-to-order and therefore may differ slightly within manufacturing tolerances. 4) Cable / chain can be shortened during installation. Longer cable / chain lengths available on request. 5) Additional colour finishes may be available on request. 6) Refer to our website for a full list of terms and conditions.

DOUBLE Bathroom Light

MLBWL169SATBRS Satin Brass

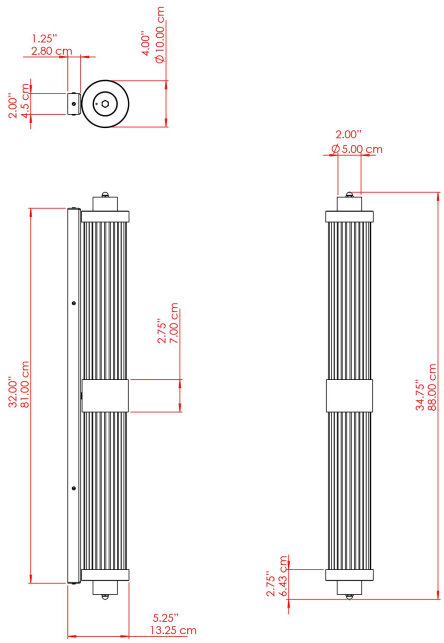

MATERIAL	Brass | Steel | Glass
HEIGHT	88cm
WIDTH | DIAMETER	13.25cm
LENGTH | PROJECTION	13.25cm
WEIGHT	4.8 kg
LAMPHOLDER	E27
MAX WATTAGE	40W
VOLTAGE	220/240v
IP RATING	IP44
CLASS PROTECTION	Class I
SHADE	GL185
FLEX | BAR | CHAIN LENGTH	n/a
CABLE TYPE	- |

FIXING BRACKET:

EST. 2009 mullan TAILOR-MADE

WWW.MULLANLIGHTING.COM

Product Notes:
1) Bulbs not included. 2) Dimensions do not include bulbs. 3) All products are individually made-to-order and therefore may differ slightly within manufacturing tolerances. 4) Cable / chain can be shortened during installation. Longer cable / chain lengths available on request. 5) Additional colour finishes may be available on request. 6) Refer to our website for a full list of terms and conditions.